PRESTRESSED CONCRETE TECHNOLOGY

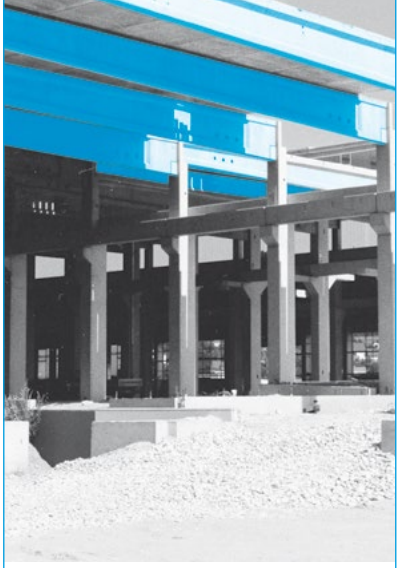

Prestressed concrete production in the precast plant

Paul
Maschinenfabrik GmbH & Co. KG

en Paul-Info B147.26/02

Overview of casting bed equipment

Prestressed concrete technology in use

on YouTube

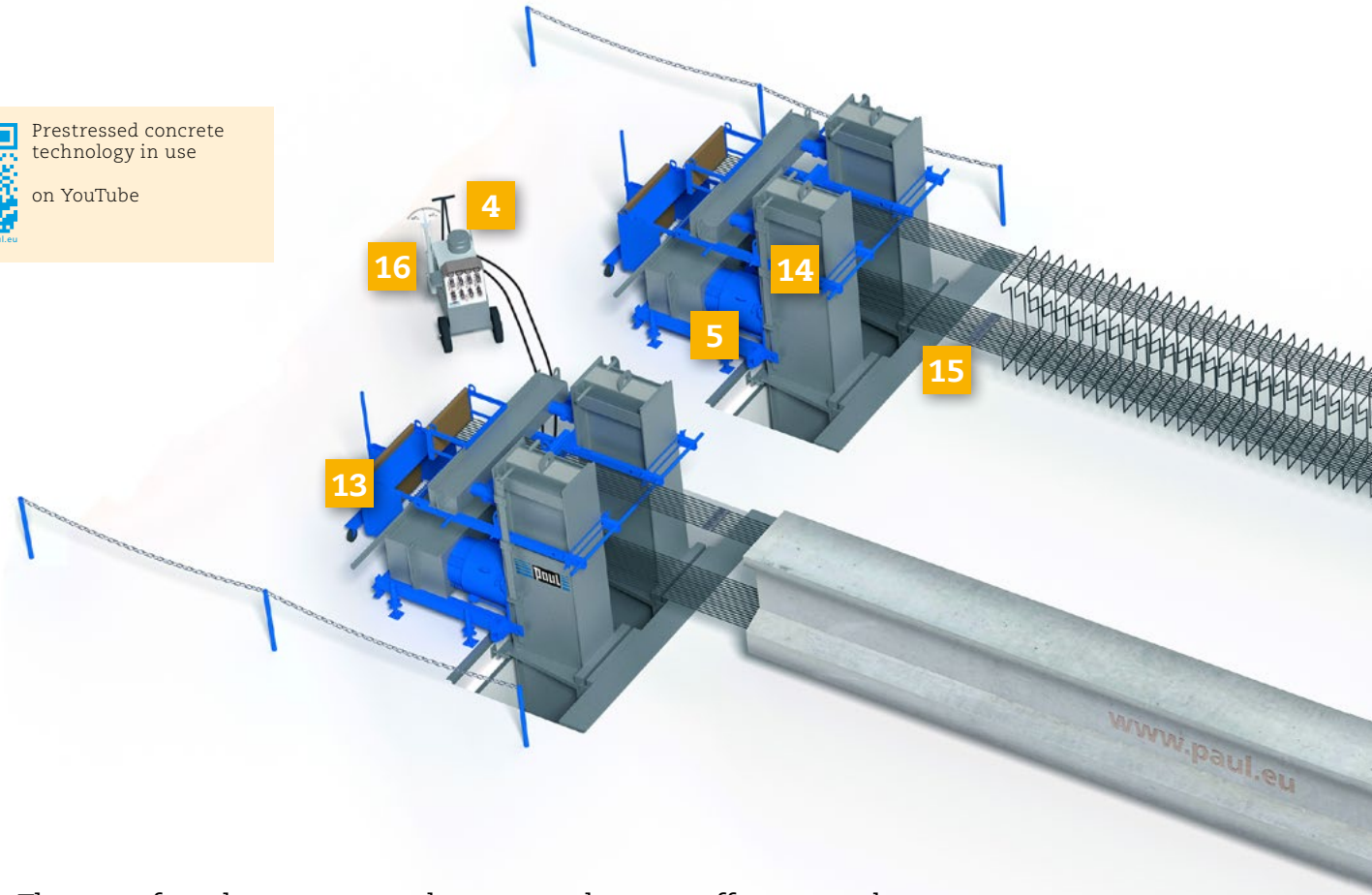

The use of modern prestressed concrete elements offers a number of benefits:

- Large spans
- Filigree construction
- High quality due to consistent production conditions
- Minimal construction work on site
- Savings on reinforcing steel
- Efficiency of production

In the manufacture of pretensioned components where the strands are cast directly into the concrete, the prestressing force is taken up by an external structure until the required concrete compressive strength is reached. On detensioning, the prestressing force is transferred onto the component as evenly and gently as possible.

1 Single-wire/strand stressing jack
2 Pump unit
3 TENSAcontrol
4 Detensioning pump
5 Detensioning cylinder
6 Strand uncoiling reel
7 Roller deflector
8 Electric pushing machine
9 Hydraulic wire/strand cutter
11 Transverse anchor plate
12 Abutment anchor post
13 Guard
14 Supports
15 Wire/strand coupler
16 Synchronized stroke indicator
20 Anchor grips
b Protective wall (by customer)
c Barrier chain (by customer)

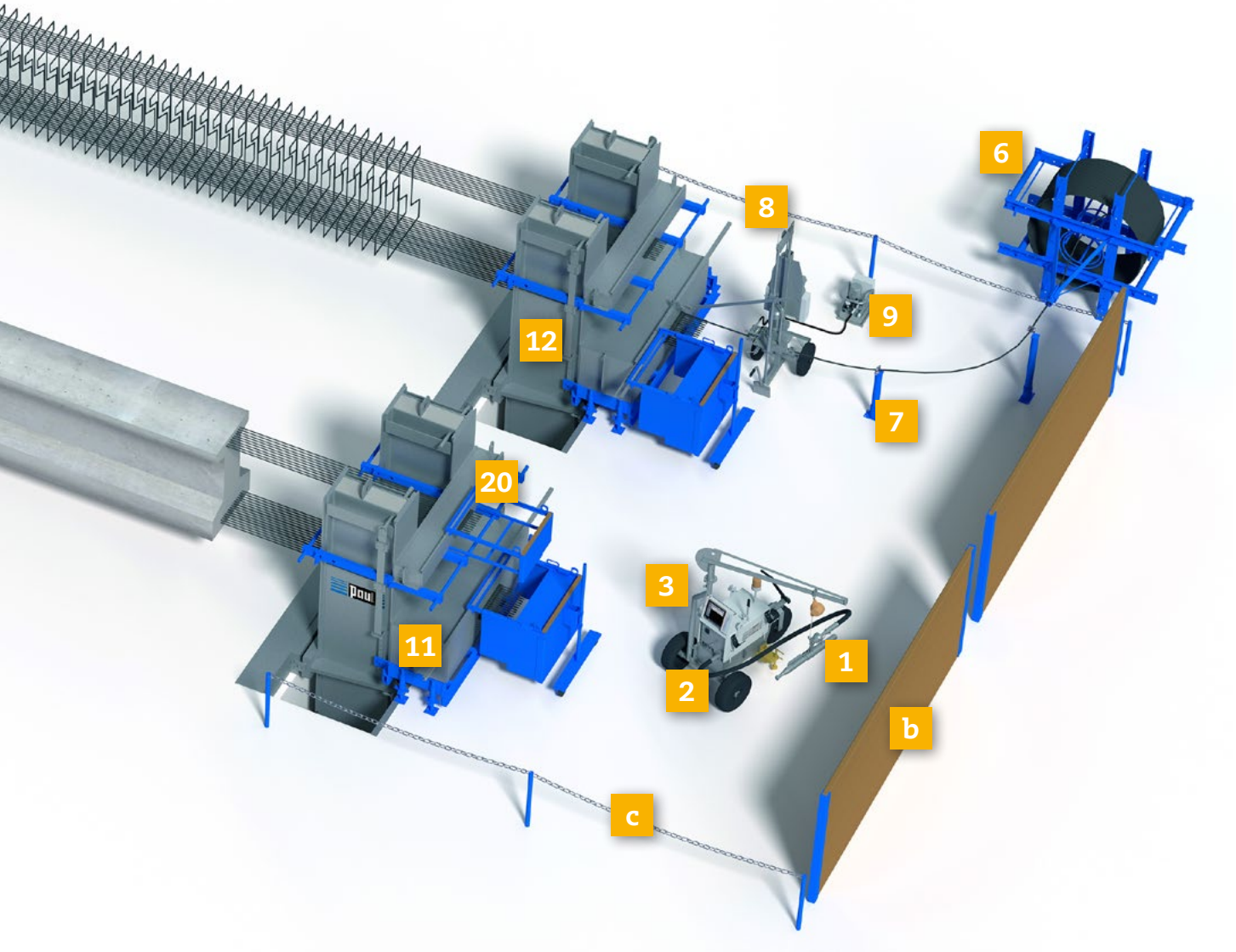

On a casting bed, as shown here, the prestressing forces are taken up during production without impeding access to the concrete element, i.e. mould. This casting bed is flexible and suitable for the production of different kinds of prestressed members.

We will be pleased to advise you on other types of force absorption by means of stress-resisting moulds or side walls.

Casting Bed Equipment

For large-volume production of identical or similar concrete members, a long casting bed for producing several members in line offers essential benefits if space is available. Both the initial investment cost in the casting bed and the amount of work and raw materials required are significantly reduced.

Where space is at a premium or in the case of small-lot or one-off productions, efficient production is ensured with flexible equipment on short casting beds.

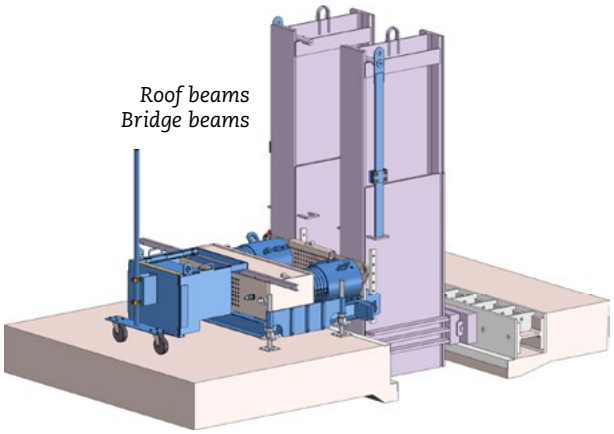

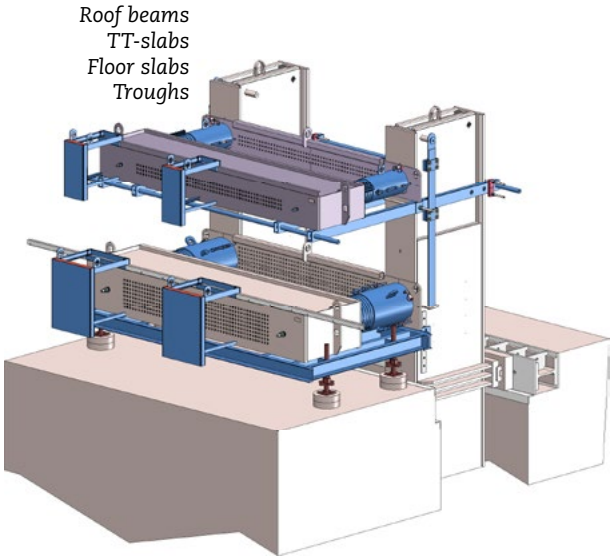

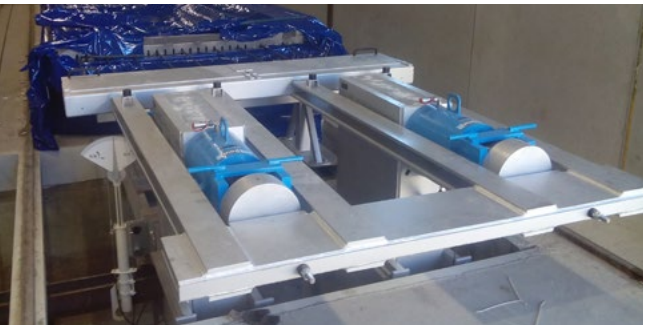

Floor slabs

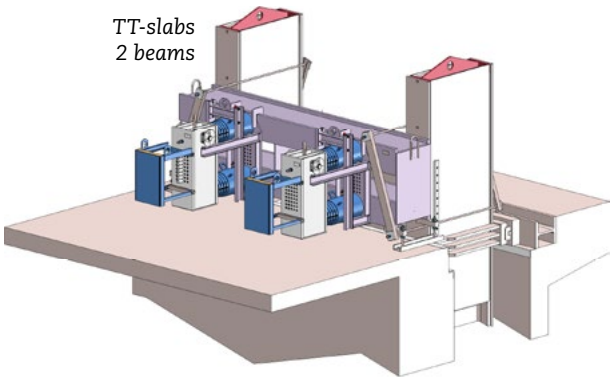

Abutments, transverse anchor plates & Co.

We distinguish between two types of abutments, the ground-pressure abutment for good quality soil and the gravity-type abutment for poor soil quality or non-load-bearing soils. Based on your specifications for the intended product range (stressing forces, strand pattern and mould substructure), we will recommend a suitable abutment size.

Tensioning end

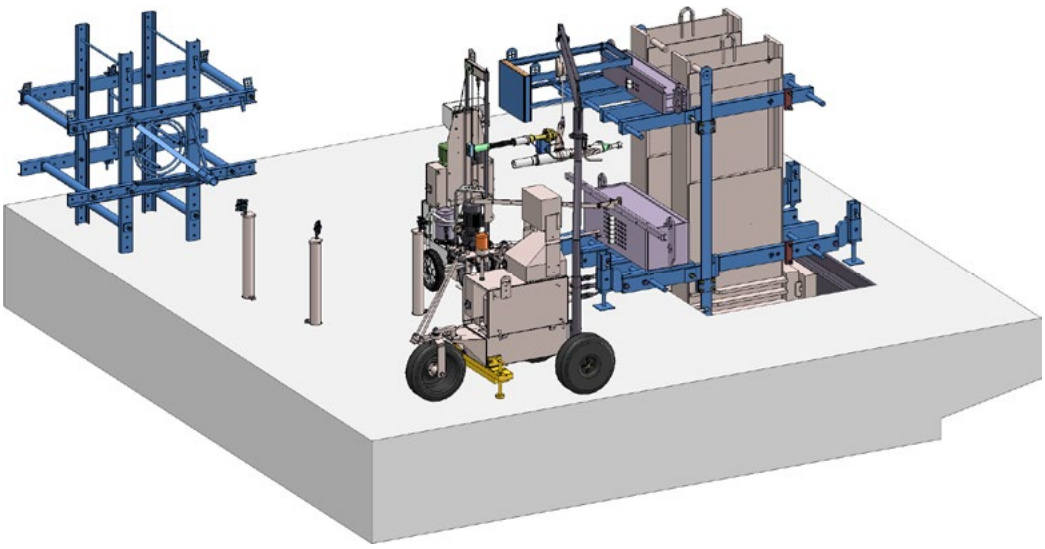

Detensioning end

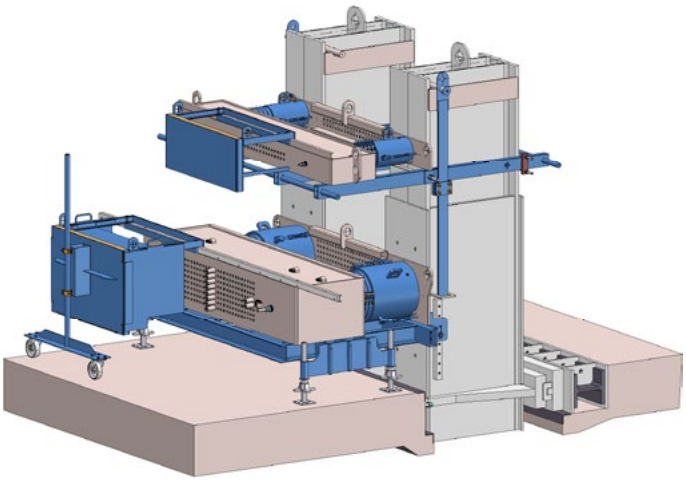

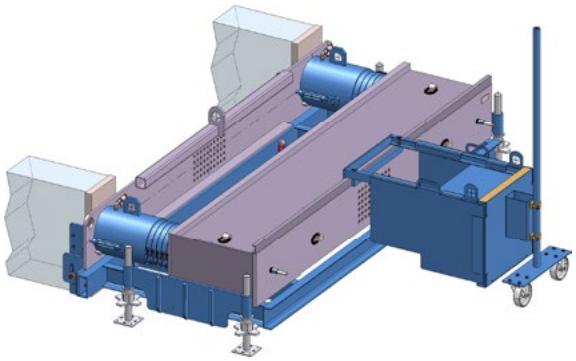

12 steps to the precast prestressed concrete member

PAUL not only supplies abutment anchor posts and transverse anchor plates, but also a wide range of stressing and ancillary equipment. Our products support you safely, quickly and efficiently in your 12 steps to the precast prestressed concrete member.

We select stressing jacks, pump units, pushing machines, steel cutters, anchor grips, detensioning cylinders and detensioning pump units as well as the wide range of accessories to suit your specific requirements and circumstances.

11. Cutting the prestressing steel

10. Detensioning

9. Demoulding

8. Curing

9. Casting concrete

Paul
Maschinenfabrik GmbH & Co. KG

12. Removal of concrete member

1. Preparation of mould, setting in place of non-prestressed reinforcement

2. Preparation of detensioning equipment

3. Insertion of prestressing steel

4. Applying anchor grips

5. Closing mould

6. Stressing

Basic machinery equipment

Preparation of detensioning equipment

The special hydraulics of the detensioning pump unit ensures that large cylinders are quickly extended at low pressure.

Different sizes and design on inquiry.

B130.01/4 Detensioning pump unit
B562.01/1 Detensioning cylinders

Insertion of prestressing steel

Electric wire/strand pushing machine

- For pushing wire/strand into reinforcement cages
- On request with integrated steel cutter
- Push-button control on pushing machine or radio remote control
- Electric height adjustment
- Pushing speed 1 m/s (walking pace)
- With suitable threading aid
- Can be used on several casting beds
- Pushing length approx. 80 m, depending on friction

Further version on inquiry

B106.01/1 Electric pushing machine
B106.20/1 Pushing systems for preparation of reinforcement outside the mould

stressing-channel.paul.eu

Anchor grips

B146.01/1 Anchor Grips

For the stressing end of the bed:
Open barrels with wedges
The stressing jack centers itself on the barrel and anchors the stressing force by power seating of the wedges. This reduces the loss of force due to draw-in and wear on the wedges.

For the dead end:
Enclosed barrels with wedges
Barrels with screwed or bayonet cap are fast to mount securing the position of the wedges at the unobserved dead end of the bed.

For long free strand lengths:
Couplers with wedges
The amount of prestressing steel required can be reduced by using couplers at the dead end of the bed enabling free wire/strand remnants to be reused many times.

Suitable sizes on inquiry.

Stressing

B131.14/21 Automatic single-wire stressing jack
B101.16 TENSAcontrol

The single-wire stressing jack ensures that equal tension is applied to each wire or strand in the tendon. For the precast factory where a large number of tendons are to be stressed every day under consistent conditions and with high quality, we recommend using a four-hose stressing jack with a powerful hydraulic unit.

Optional features, such as automatic logging of prestressing force and elongation, jack lifting unit for ergonomic handling and pneumatic tyres for internal transport will enhance the efficiency of production.

Different versions and sizes on request.

Detensioning

The detensioning pump unit operates at a low flow rate for the accurate extension of the detensioning cylinders by a few millimeters for releasing the support sleeves.

Ask us for the different versions and sizes available.

With the synchronized stroke indicator, the operator monitors the uniform retraction of the detensioning cylinders from a safe distance. The pointer is moved by two Bowden cables via a deflection pulley. The total stroke can be read from an extra scale.

B130.01/4 Detensioning pump unit
B101.17/1 Synchronized stroke indicator

Cutting the prestressing steel

The abrasive cutter with adapter head is designed for cutting the tendons in confined spaces, e.g. between concrete members on a long casting bed.

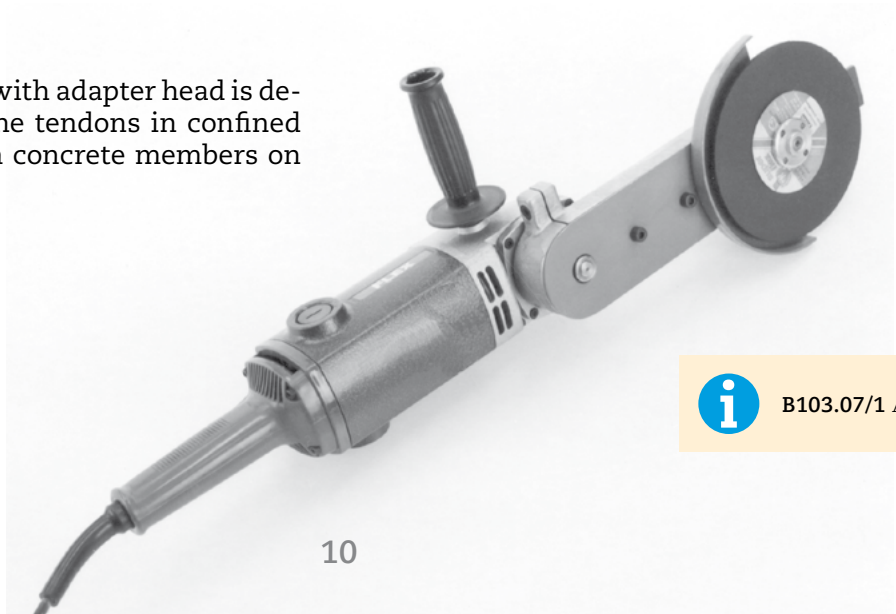

B103.07/1 Abrasive cutter

Accessories

Cleaning and maintenance of anchor grips

Check and clean the anchor grips before each use. The cleaning chain for wet and dry cleaning contains all accessories required, ranging from the base cabinet via cleaning agents and brushes to lubricants.

B246.01/1
Cleaning and Maintenance of Anchor Grips

vimeo.com/paulmaschinenfabrik

Measuring the stressing force

The DMS force measuring unit or hydraulic measuring unit is used to check the prestressing force of individual wires/strands for quality assurance and for the six-monthly calibration of the stressing jack. On request, the force measuring unit will be calibrated according to DIN EN ISO 376.

B101.11/1 DMS force measuring unit
B101.09/3 Hydraulic force measuring unit
B101.03/1 Pressure recorder

B101.11/1 DMS force measuring unit
B101.09/3 Hydraulic force measuring unit
B101.03/1 Pressure recorder

1902

Service

Planning

For planning your casting bed equipment, we take into account local soil conditions, the formwork you have chosen, your planned prestressed concrete products and production methods as well as the intended productivity. We advise you on the advantages and disadvantages and explain the limits of the respective equipment always keeping an eye on safety aspects.

For the basic machinery equipment we offer you convenient, automated high-efficiency machines meeting highest demands as well as robust, simple and expandable equipment for a cost-effective entry into the prestressed concrete technology.

Commissioning

Installation of the casting bed equipment is carried out at your site by a chief installation technician who also puts the machines into operation and instructs your personnel on operation, maintenance and care. On the last day of commissioning our technician is available to accompany the production of the first prestressed concrete member and carry out safety training.

Training

We offer safety trainings in theory and practice with certificate of attendance covering the main topics: Setting up the casting bed, preparation, tensioning, detensioning, maintenance, cleaning and care.

We will also be pleased to welcome your maintenance personnel to our premises for an individual and practical training on the maintenance and care of the machines.

Find your contact and further info at
stressing.paul.eu

Paul Maschinenfabrik GmbH & Co. KG

Max-Paul-Str. 1
88525 Dürmentingen
Germany

☎ +49 7371 500-0
+49 7371 500-111
stressing@paul.eu